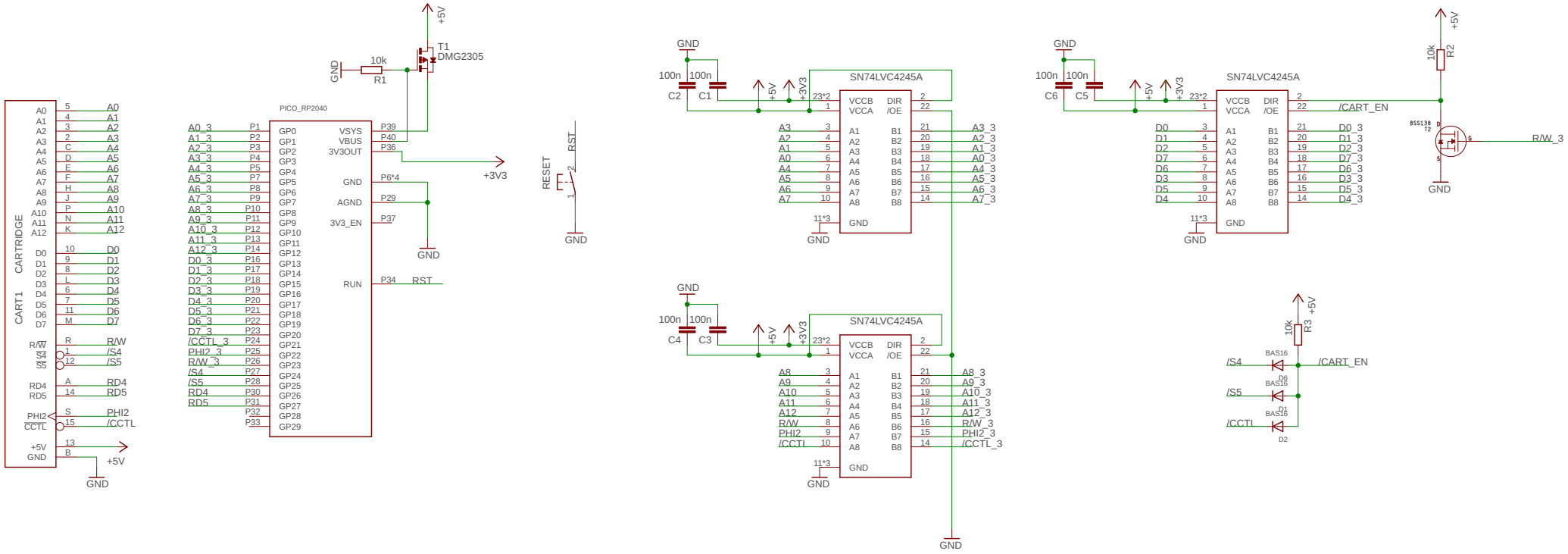
CARTRIDGE
CART1
PICO_RP2040
SN74LVC4245A
SN74LVC4245A
SN74LVC4245A
T1
DMG2305
R1
10k
R2
10k
R3
10k
C1
C2
C3
C4
C5
C6
100n
RESET
RST
/CART_EN
R/W_3
BAS16
BSS138
+5V
+3V3
GND